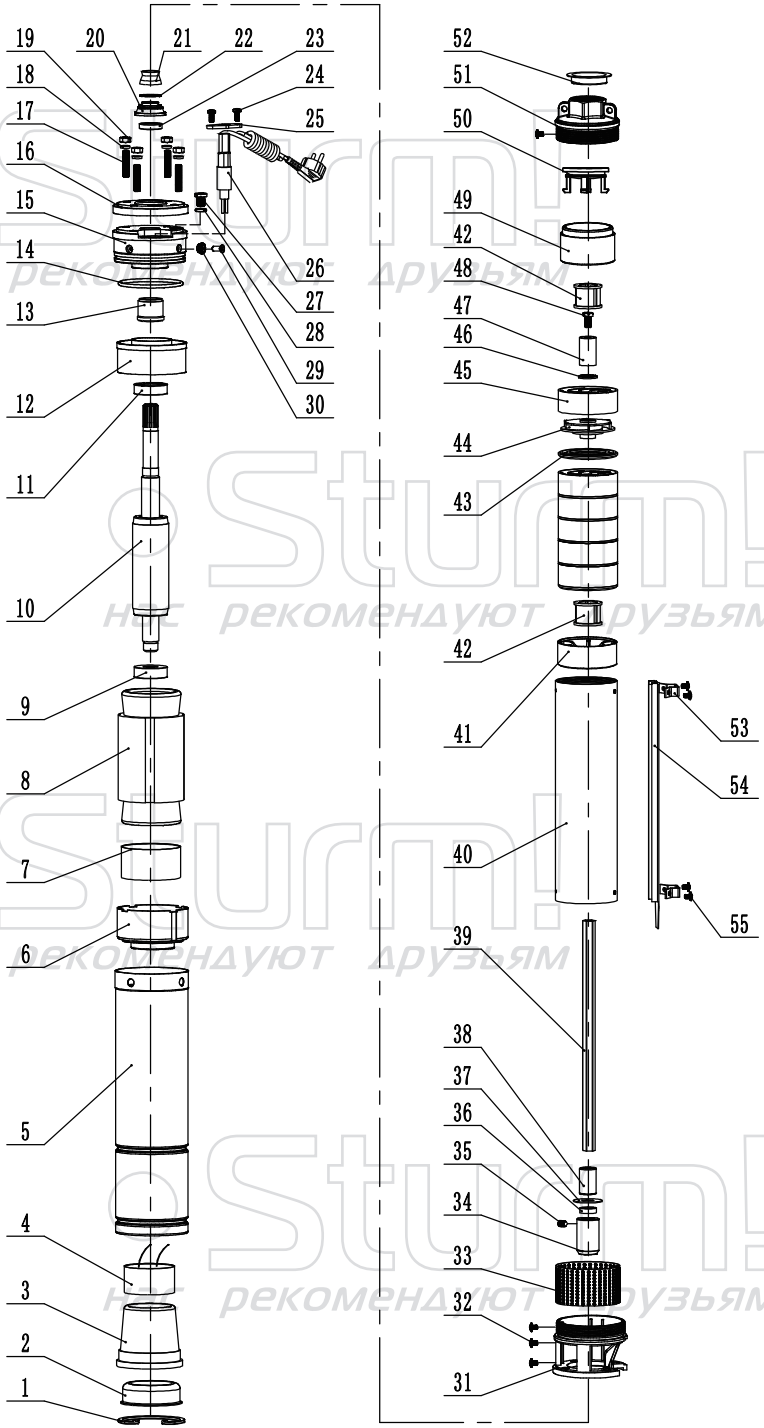

WP9724DWI、WP9725DWI
WP9727DWI、WP9729DWI

NO.	DESCRIPTION	NO.	DESCRIPTION
1	CLAMP SPRING	31	SUCTION SUPPORT
2	END COVER	32	SCREW
3	RUBBER CUP	33	STRAINER
4	OIL RESISTANCE CAPACITOR	34	COUPING
5	MOTOR HOUSING	35	FIXED SCREW
6	BEARING SEAT	36	PIPE SHAFT
7	INSULATING PAPER	37	HEXAGON TAB
8	STATOR	38	LOWER SLEEVE
9	BEARING 6203	39	PUMP SHAFT
10	ROTOR	40	PUMP HOUSING
11	BEARING 6203	41	MIDDLE SUPPORT
12	PLASTIC COVER	42	GUIDE BUSH
13	MECHANICAL SEAL	43	DIFFUSER COVER
14	0-RING	44	IMPELLER
15	0IL CHAMBER	45	DIFFUSER
16	STAINLESS STEEL COVER	46	SEAL GASKET
17	STUD	47	BEARING BUSH
18	SPRING WASHER	48	SCREW
19	NUT	49	VALVE SEAT
20	SAND TRAP	50	VALVE
21	SAND PROOF CAP	51	OUTLET
22	ANTIWEAR WASHER	52	ANTI-DUST COVER
23	STATIC SEAL	53	CABLE COVER
24	SCREW	54	HOLDER PIPE
25	COVER PLATE	55	SCREW
26	CABLE & PLUG		
27	SCREW		
28	0-RING		
29	SCREW		
30	LOCKING RING		

WP9724DWI、WP9725DWI、WP9727DWI、WP9729DWI EX-20210111

Sturm! нас рекомендуют друзьям